MULTI PURPOSE SERIES

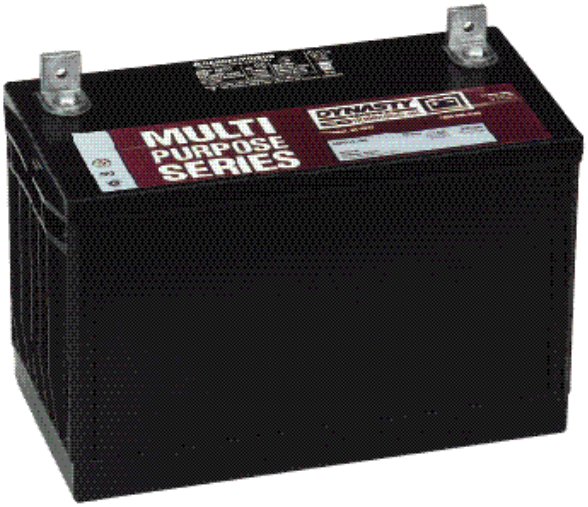

Valve Regulated Battery Designed for Uninterruptable Power Supply (UPS), Emergency Lighting, Communication, General Purpose and Other Float Service Applications.

MPS12-100

VALVE REGULATED LEAD ACID BATTERY FOR STANDBY POWER APPLICATIONS 12V 100 AH @ 20 HR RATE, 12V 330 WATTS/ CELL @ 15 MIN RATE

FEATURES

- Robust plate for extended life.
- Flame-arresting one-way pressure-relief vent for safety and long life.
- Durable polypropylene container and cover.
- Thermally welded case-to-cover bond to eliminate leakage.
- Absorbent Glass Mat (AGM) technology for efficient gas recombination of up to 99% and freedom from electrolyte maintenance.
- UL-recognized component.
- Multicell design for economy of installation and maintenance.
- Can be used in any orientation. Upright, side, or end mounting recommended.
- Not restricted for air transport – Complies with IATA/ICAO Special Provision A67.
- Not restricted for surface transport – classified as non-hazardous material as related to DOT-CFR Title 49 parts 171-189.
- Not restricted for water transport – classified as non-hazardous material per IMDG Amendment 27.
- Computer designed lead, low calcium alloy grid for minimal gassing and ease of recycling.

12 Volts – 100 Ampere Hour Capacity @ 20 Hour Rate

Ampere Hour Capacity to 1.75 Volts per Cell @ 77°F (25°C)

Discharge in Hours	1.00	2.00	3.00	4.00	5.00	6.00	7.00	8.00	10.00	12.00	20.00	24.00	72.00	100.00
Amp-Hr Capacity	61.5	69.5	75.0	78.3	81.0	84.0	86.0	88.0	90.8	93.5	100.0	100.5	103.0	104.0

C&D Technologies, Inc.
DYNASTY Division
900 East Keefe Avenue
Milwaukee, WI 53212
Phone: 800-396-2789
Fax: 414-961-6506

Form 41-6233MPS (Rev. 05/99) Printed in the U.S.A.

DYNASTY DIVISION C&D TECHNOLOGIES, INC. MPS

MPS12-100

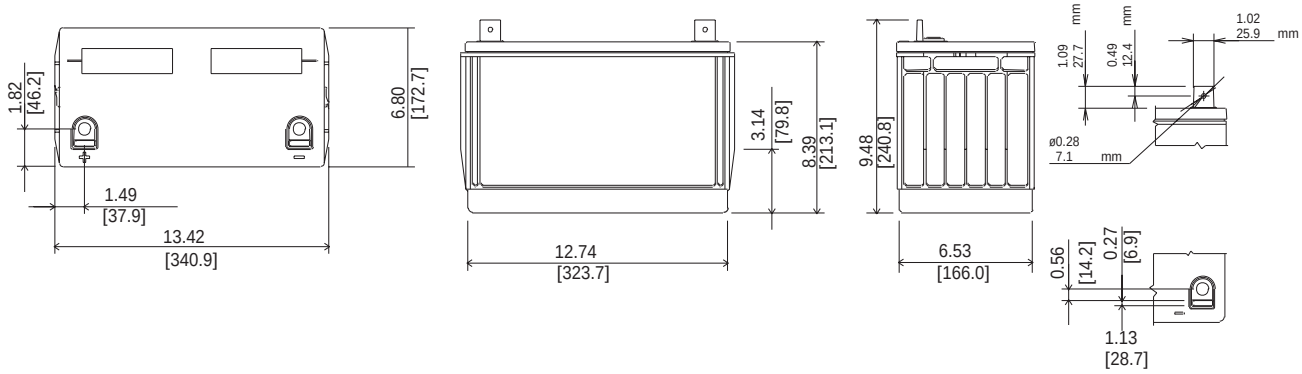

*All dimensions in inches and (millimeters). All dimensions are for reference only.
Contact a C&D Representative for complete dimensional information.

MPS12-100 – Specifications

Cells Per Unit	Voltage Per Unit	Weight	Electrolyte	Maximum Discharge Current	Short Circuit Current	Ohms Imped. 60 Hz (Ω)
6	12.84	72 lbs. 33 kg	Absorbed H_2SO_4 SG = 1.300	800 Amps	3600 Amps @ 0.1 sec.	0.0035 Ohms

Capacity	330 watts per cell at the 15 minute rate to 1.67 volts per cell at 77˚F (25˚C). 100.0 Ah @ 20 hr. rate to 1.75 volts per cell @ 77˚F (25˚C) 86.2 Ah @ 10 hr rate to 1.80 volts per cell @ 20˚C (68˚F)
Operating Temperature Range	**Discharge;** -40˚F (-40˚C) to +160˚F (71˚C),**Charge;** -10˚F (-23˚C) to +140˚F (60˚C) (with temperature compensation)
Recommended Operating Temperature Range	+74˚F (23˚C) to +80˚F (27˚C)
Float Charging Voltage	13.5 to 13.8 VDC/unit Average at 77˚F (25˚C).
Recommended Maximum Charging Current Limit	C/5 amperes (20.0 amperes @ 100% depth of discharge) @ 20 hour rate
Equalization and Cycle Service Charging Voltage	14.4 to 14.8 VDC/unit Average at 77˚F (25˚C).
Maximum AC Ripple (Charger)	0.5% RMS or 1.5% P-P of float charge voltage recommended for best results. Maximum AC ripple voltage allowed = (4% P-P) Maximum AC ripple current allowed = 5.0 amperes rms (C/20)
Self Discharge	Dynasty MPS batteries may be stored for up to 6 months at 77˚F (25˚C) and then a freshening charge is required. For higher temperatures the time interval will be shorter.
Accessories	Inter unit connectors, racks and cabinet systems are available.
Terminal	"L" terminal with 0.28" clearance hole to accept 0.25" (6mm) bolt.
Terminal Hardware Initial Torque	65 in.-lbs. (7.35n-m).
Terminal Hardware Annual Retorque	52 in.-lbs. (5.88n-m).

Constant Power Discharge Ratings – Watts Per Cell @ 77°F (25°C)

End Point Volts/Cell	Operating Time to End Point Voltage (in minutes)									
	5	10	15	20	30	40	45	50	60	90
1.75	510	375	305	260	200	163	150	138	120	84.0
1.70	540	400	320	267	205	168	155	141	121	85.0
1.67	565	420	330	275	208	170	157	143	123	87.0
1.65	570	424	333	277	209	171	158	144	124	88.0
1.60	590	435	345	285	212	173	160	146	125	89.0

Constant Current Discharge Ratings – Amperes @ 77°F (25°C)

End Point Volts/Cell	Operating Time to End Point Voltage (in hours)														
	.083	.25	.50	.75	1	2	3	5	8	10	12	20	24	72	100
1.90	156	110	75.0	61.0	47.0	28.9	21.0	14.0	9.50	7.90	6.73	4.34	3.65	1.26	0.91
1.85	203	136	92.0	73.5	55.0	31.4	22.8	15.0	10.1	8.44	7.23	4.67	3.92	1.37	0.99
1.80	240	151	99.0	79.5	60.1	34.0	24.2	15.8	10.7	8.80	7.58	4.89	4.10	1.42	1.03
1.75	274	162	105	83.2	61.5	34.8	25.0	16.2	11.0	9.08	7.79	5.00	4.19	1.43	1.04

Note: Batteries to be mounted with 0.5 in. (1.25 cm) spacing minimum and free air ventilation. Specifications subject to change without notification.